1.PHYSICAL CHARACTERISTICS(mm)

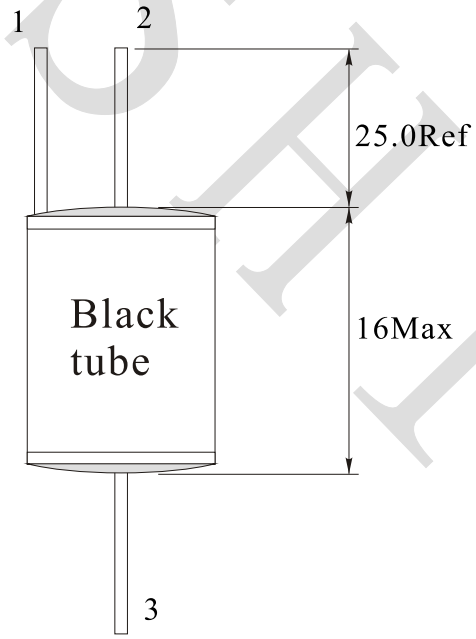

At both ends
coated with epoxy

Windings are impregnated
with vertical water and wax
immersion is not allowed

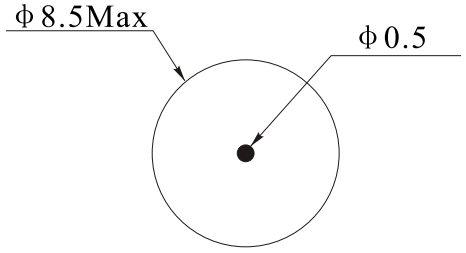

2.ELECTRONICAL SCHEMATIC

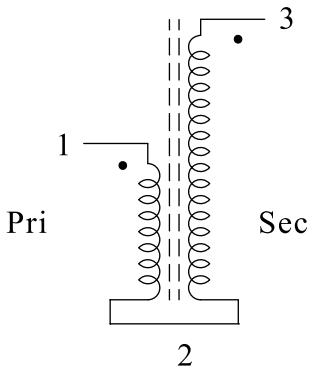

Pri: ϕ0.25mm 28Ts
Sec: ϕ0.05mm 950Ts

3.ELECTRONICAL SPECIFICATIONS

L: Pri: 12.3uH±20% @1.0KHz,0.1V

Sec: 9.8mH±20% @1.0KHz,0.1V

DCR: Pri: 0.26Ω Max

Sec: 130Ω Max

Peak Output Voltage: 7.5KV Typ.@input 150VDC

Peak Output Voltage: 15KV Typ.@input 330VDC

Test Instrument:

L: HP4284A

RDC: HM2540

NOTES:

Temp 20℃ 48%RH

RoHS Compliant

NAME:	Trigger coil		
CUSTOMER P/N:		DATE:	2021-09-09
SHINHOM P/N:	TCB7513-1	REV: A0	PAGE
DRAWN BY	CHECKED BY	APPROVE BY	

SHINHOM
SHAANXISHINHOM ENTERPRISE CO LTD

The Document property belong to SHINHOM & is not allowed to be duplicated without authorization

SHINHOM